SECTION FL

FUEL SYSTEM

CONTENTS

PREPARATION **2**
Commercial Service Tools 2
FUEL SYSTEM **3**
Checking Fuel Lines 3
General Precautions 3
FUEL LEVEL SENSOR UNIT, FUEL FILTER AND FUEL PUMP ASSEMBLY **4**
Removal and Installation 4
REMOVAL 4
INSPECTION AFTER REMOVAL 7
INSTALLATION 7
INSPECTION AFTER INSTALLATION 8
Disassembly and Assembly 8
DISASSEMBLY 9
ASSEMBLY 10
FUEL TANK **11**
Removal and Installation 11
REMOVAL 11
INSTALLATION 12
INSPECTION AFTER INSTALLATION 13
SERVICE DATA AND SPECIFICATIONS (SDS) **14**
Standard and Limit 14
FUEL TANK 14

PREPARATION

PFP:00002

Commercial Service Tools

ABS00D0K

The actual shapes of Kent-Moore tools may differ from those of special service tools illustrated here.

(Kent-Moore No.) Tool name	Description
(J-38879-A) Fuel tank lock ring wrench 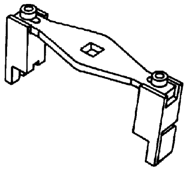 ZZA0122D	Removing and installing fuel tank lock ring

FUEL SYSTEM

PFP:17503

Checking Fuel Lines

ABS00D0L

Inspect fuel lines, fuel filler cap and fuel tank for improper attachment, leaks, cracks, damage, loose connections, chafing or deterioration.
If necessary, repair or replace damaged parts.

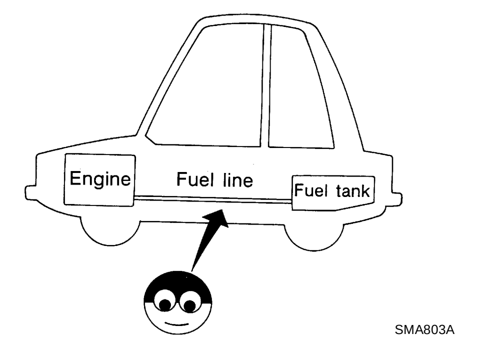

SMA803A

General Precautions

ABS00D0M

WARNING:

When replacing fuel line parts, be sure to observe the following.

- **Put a “CAUTION: INFLAMMABLE” sign in the workshop.**
- **Be sure to work in a well ventilated area and furnish workshop with a CO_2 fire extinguisher.**
- **Do not smoke while servicing fuel system. Keep open flames and sparks away from the work area.**
- **Put drained fuel in an explosion-proof container and put the lid on securely. Keep the container in safe area.**

CAUTION:

- **Use gasoline required by the regulations for octane number. Refer to GI-5, "Precautions for Fuel (Unleaded Regular Gasoline Recommended)" .**
- **Before removing fuel line parts, perform the following procedures:**
  - **Release fuel pressure from the fuel lines. Refer to EC-80, "FUEL PRESSURE RELEASE" .**
  - **Disconnect battery cable at negative terminal.**
- **Always replace clamps with new ones.**
- **Do not kink or twist tubes when they are being installed.**
- **Perform work on level place.**
- **Do not tighten hose clamps excessively to avoid damaging hoses.**
- **After connecting fuel tube quick connectors, make sure quick connectors are secure.**
  Ensure that connector and resin tube do not contact any adjacent parts.
- **After installing tubes, check if there are no fuel leakage at connections in the following steps.**
  - **Apply fuel pressure to fuel lines with turning ignition switch “ON” (with engine stopped). Then check for fuel leaks at connections.**
  - **Start engine and rev it up and check for fuel leaks at connections.**
- **For servicing “Evaporative Emission System” parts, refer to EC-30, "EVAPORATIVE EMISSION SYSTEM" .**
- **For servicing “On Board Refueling Vapor Recovery (ORVR) System” parts, refer to EC-37, "ON BOARD REFUELING VAPOR RECOVERY (ORVR)" .**

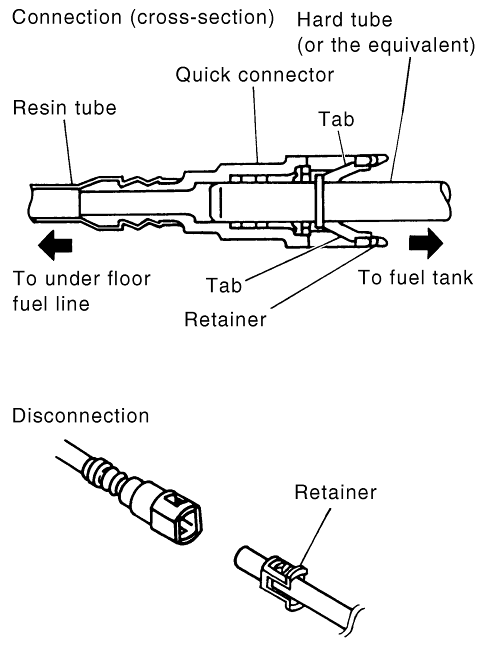

SBIA0504E

FUEL LEVEL SENSOR UNIT, FUEL FILTER AND FUEL PUMP ASSEMBLY PFP:17042

Removal and Installation

ABS00D0N

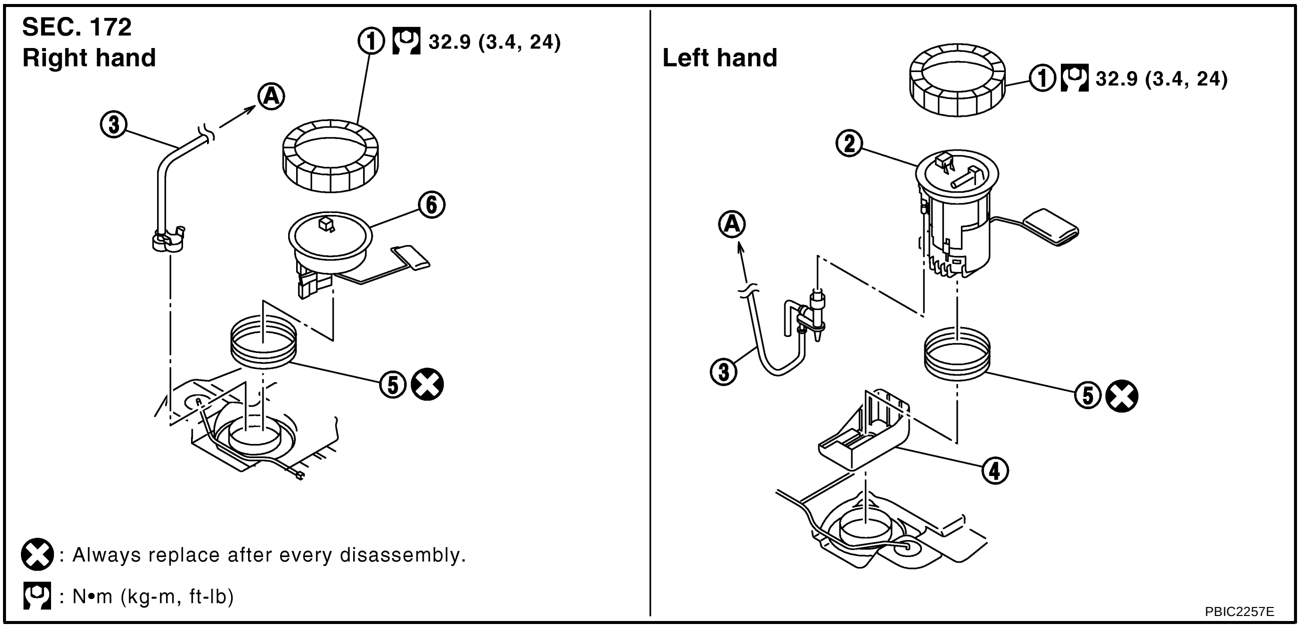

1.	Lock ring	2.	Main fuel level sensor unit, fuel filter and fuel pump assembly	3.	Jet pump, fuel hose and jet pump inlet assembly
4.	Chamber	5.	Seal packing	6.	Sub fuel level sensor unit

REMOVAL

WARNING:

Be sure to read "General Precautions" when working on the fuel system. Refer to FL-3, "General Precautions" .

1. Check fuel level on fuel gauge. If fuel gauge indicates more than the level as shown in the figure (full or almost full), drain fuel from fuel tank until fuel gauge indicates level as shown in the figure or below.

   NOTE:

   Fuel will be spilled when removing main and sub fuel level sensor units for the top of the fuel is above the main and sub fuel level sensor units installation surface.

   - As a guide, fuel level becomes the position as shown in the figure or below when approximately 15 ℓ (4 US gal, 3-1/4 Imp gal) of fuel are drained from fuel tank.
   - In a case that fuel pump does not operate, perform the following procedure.

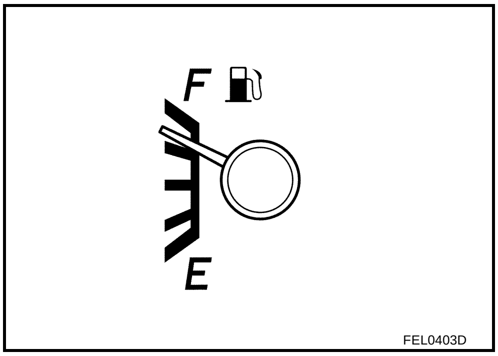

a. Insert hose of less than 20 mm (0.79 in) in diameter into fuel filler tube through fuel filler opening to draw fuel from fuel filler tube.

b. Disconnect fuel filler hose from fuel filler tube. Refer to FL-11, "FUEL TANK" .

c. Insert hose into fuel tank through fuel filler hose to draw fuel from fuel tank.

2. Release the fuel pressure from the fuel lines. Refer to EC-80, "FUEL PRESSURE RELEASE" .
3. Open fuel filler lid.
4. Open fuel filler cap and release the pressure inside fuel tank.
5. Lift to hold rear seat cushion up. Refer to SE-24, "REAR SEAT" .

6. Remove inspection hole cover for main and sub fuel level sensor units.
   - Remove cover by pushing it, then by turning clips clockwise by 90 degrees and by matching both cover hole and clip shape.

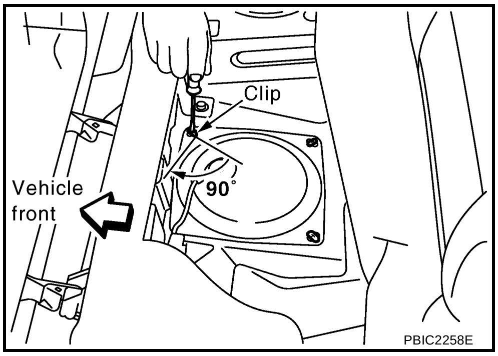

PBIC2258E

7. Disconnect harness connector and quick connector.

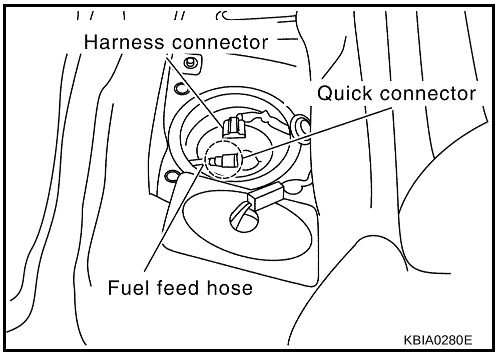

KBIA0280E

   - Disconnect quick connector as follows:
     - Hold the sides of connector, push in tabs and pull out fuel feed hose.
     - If quick connector sticks to tube of fuel level sensor unit, push and pull quick connector several times until it starts to move. Then disconnect quick connector by pulling.

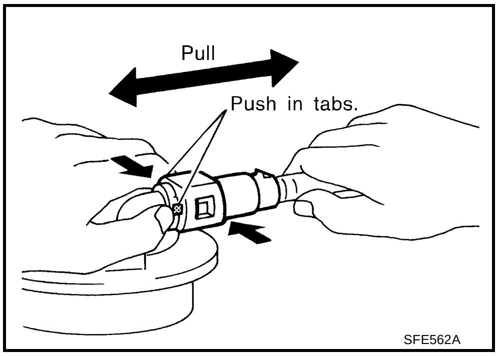

SFE562A

CAUTION:
- **Quick connector can be disconnected when the tabs are completely depressed. Do not twist it more than necessary.**
- **Do not use any tools to disconnect quick connector.**
- **Keep resin tube away from heat. Be especially careful when welding near the resin tube.**
- **Prevent acid liquid such as battery electrolyte, etc. from getting on resin tube.**
- **Do not bend or twist resin tube during installation and disconnection.**
- **Do not remove the remaining retainer on hard tube (or the equivalent) except when resin tube or retainer is replaced.**
- **When resin tube or hard tube (or the equivalent) is replaced, also replace retainer with a new one.**
- **Replace same color retainer as before replacing.**

Retainer color: Green

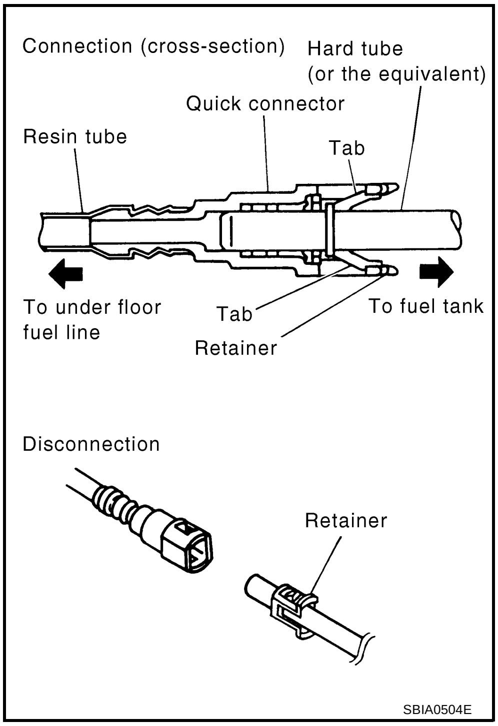

- **To keep the connecting portion clean and to avoid damage and foreign materials, cover them completely with plastic bags or something similar.**

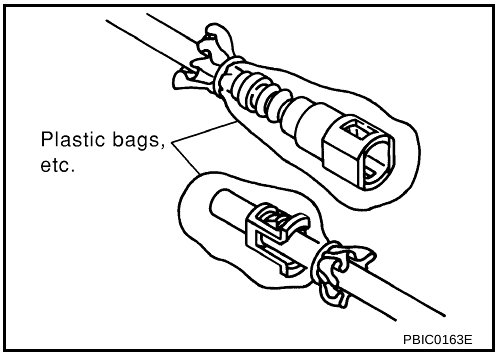

8. Using fuel tank lock ring wrench (commercial service tool: J-38879-A), remove lock ring.

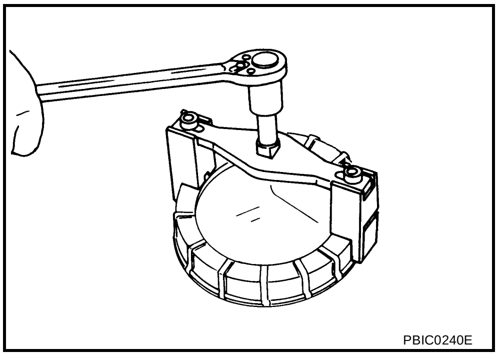

9. Remove main fuel level sensor unit, fuel filter and fuel pump assembly, and sub fuel level sensor unit as follows.

CAUTION:
- **Do not bend float arm during removal.**
- **Avoid polluting the inside by residue fuel. Draw out with avoiding inclination by supporting with a cloth.**
- **Avoid impacts such as falling when handling components.**

a. Removal of main fuel level sensor unit, fuel filter and fuel pump assembly:

i. Raise main fuel level sensor unit, fuel filter and fuel pump assembly, and disconnect jet pump.

ii. Leave jet pump on fuel tank with fuel hose.

CAUTION:

Do not separate jet pump and fuel hose.

iii. If necessary, remove chamber from the bottom of fuel tank by sliding toward the rear of the vehicle.

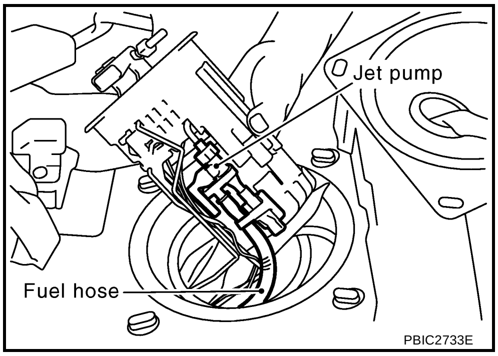

b. Removal of sub fuel level sensor unit:

i. Raise and release sub fuel level sensor unit to remove.

ii. If necessary, remove jet pump inlet with fuel hose from the bottom of fuel tank by pinching tabs.

CAUTION:

Do not separate jet pump inlet and fuel hose.

INSPECTION AFTER REMOVAL

Make sure that fuel pump strainer is free from foreign materials. If any are found, remove them.

INSTALLATION

Note the following, and install in the reverse order of removal.

Chamber and Jet Pump

When installing chamber and jet pump, insert them fully until a click sound of full stopper engagement is heard (Ditto for jet pump inlet).

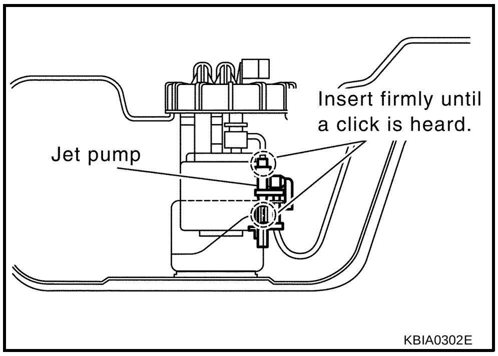

Main and Sub Fuel Level Sensor Unit

1. Install seal packing to fuel tank without any twist.
2. Face fuel level sensor unit, fuel filter and fuel pump assembly as shown in the figure, and install it to fuel tank. (Figure shows left side of fuel tank.)

   CAUTION:

   Do not bend float arm during installing.

   NOTE:

   On right side of fuel tank, there are three carved lines on fuel tank. Set mating mark between two outer carved lines.

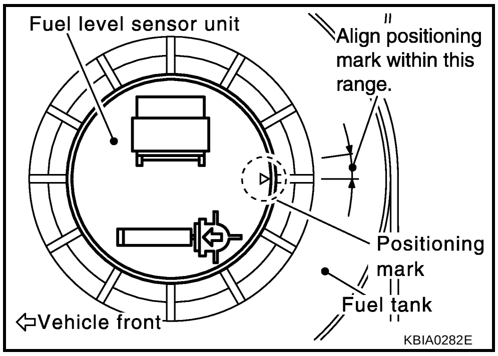

3. Tighten rock ring with rock ring wrench (commercial service tool: J-38879-A).

   CAUTION:

   Install rock ring horizontally.

Quick Connector

Connect quick connector of fuel feed hose as follows:

1. Check the connection for damage and foreign materials.
2. Align the connector with the tube, then insert the connector straight into the tube until a click sound is heard.
3. After connecting, make sure that the connection is secure by following method.
   - Visually confirm that the two tabs are connected to the connector.
   - Pull the tube and the connector to make sure they are securely connected.

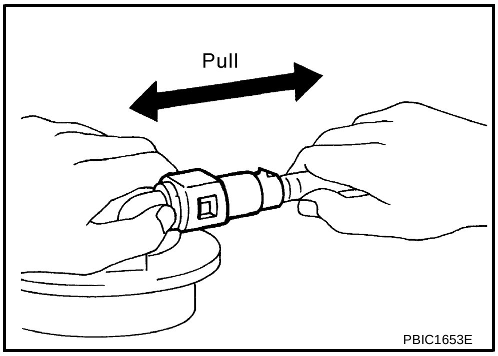

Inspection Hole Cover

1. Install inspection hole covers with the front mark (arrow) facing front of the vehicle.
2. Lock clips by turning counterclockwise by 90 degrees.

INSPECTION AFTER INSTALLATION

Use the following procedure to check for fuel leaks.

1. Turn ignition switch "ON" (with engine stopped), then check connections for leaks by applying fuel pressure to fuel piping.
2. Start engine and rev it up and make sure there are no fuel leaks at the fuel system connections.

Disassembly and Assembly

ABS00D0O

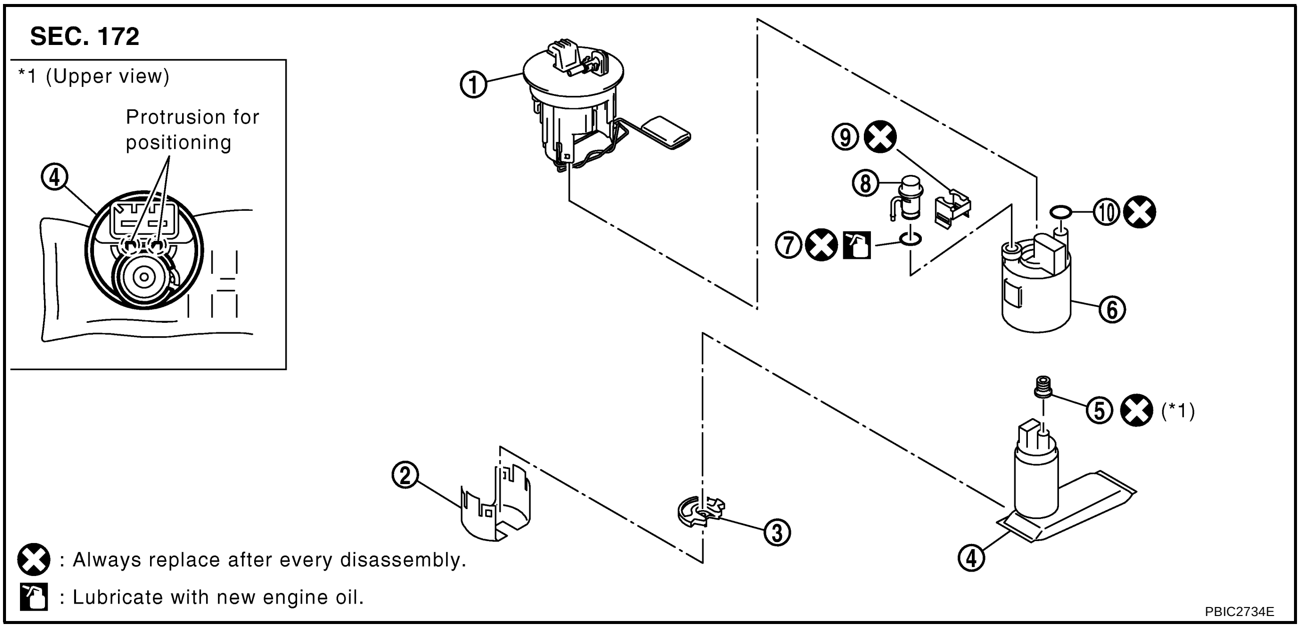

1.	Main fuel level sensor unit	2.	Bracket	3.	Rubber
4.	Fuel pump	5.	Packing	6.	Fuel filter
7.	O-ring	8.	Pressure regulator	9.	Clip
10.	O-ring				

CAUTION:

Sub fuel level sensor unit cannot be disassembled and should be replaced as a unit.

DISASSEMBLY

1. Separate fuel pump and bracket from fuel filter as follows:

a. Using flat-bladed screwdriver, separate the snap fit portion of bracket in the order of (1), (2), (3) and (4) as shown in the figure.

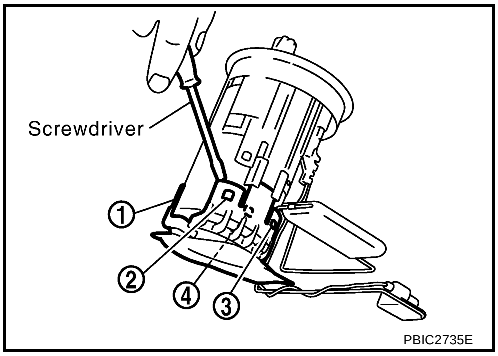

b. Pull out fuel pump, and disconnect harness connector.

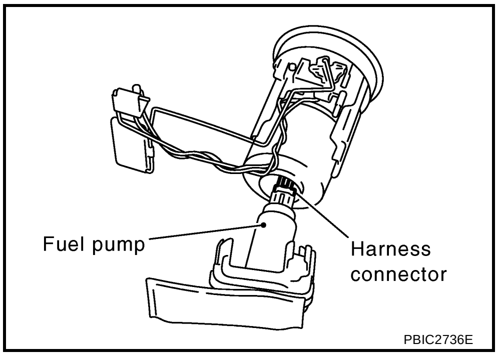

2. Separate fuel filter and main fuel level sensor unit as follows:

a. Fit a used O-ring into space between fuel level sensor unit and fuel filter. Undo catches and separate main fuel level sensor and fuel filter.
   - For reference when reassembling, put a mating mark on outer edges of main fuel level sensor unit and fuel filter with some means which cannot be erased by fuel.

b. Insert flat-bladed screwdriver to the gap between fuel filter and main fuel level sensor unit to separate them.

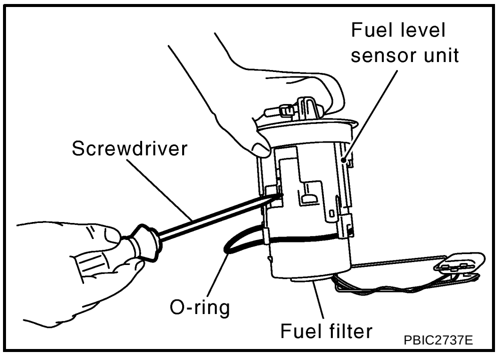

CAUTION:
- **Put cloth or similar one on the edge of screwdriver not to damage the inserted portion.**
- **Separate main fuel level sensor unit by pulling it straight. If lateral force is applied, inner resin tube (between main fuel level sensor unit and fuel filter) may break.**

3. Remove pressure regulator from fuel filter as follows:

a. Open and remove the clip.

b. Pull pressure regulator straight out during removal.

CAUTION:
- **Handle fuel tube carefully and avoid damaging it.**
- **Avoid impacts such as falling during removal.**
- **Do not disassemble or adjust.**

ASSEMBLY

Note the following, and assemble in the reverse order of disassembly.

Fuel Filter and Fuel Pump

- Install fuel filter and fuel pump with the tabs aligned, make sure a click sound of secure engagement is heard.
- Securely connect harness connector of fuel pump.

Pressure Regulator

Install pressure regulator as follows:

1. Install O-ring.

   CAUTION:

   - **Do not reuse O-ring. Replace it with a new one.**
   - **Handle O-ring with bare hands. Do not wear gloves.**
   - **Visually check O-ring, mounting parts and mating parts for foreign materials and flaws.**
   - **Before installing, lubricate new engine oil.**
   - **To avoid damage, do not apply an excessive force (pulling or stretching).**
2. Insert the clip to the groove of pressure regulator.

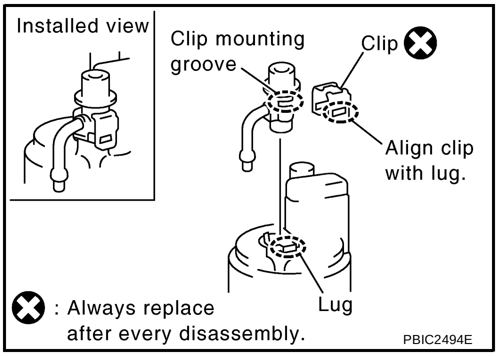

3. With the clip installed, insert pressure regulator straight by matching the fuel filter lug and the clip notch.
4. Make sure that the fuel filter lug and clip notch are securely engaged.

FUEL TANK

PFP:17202

Removal and Installation

ABS00D0P

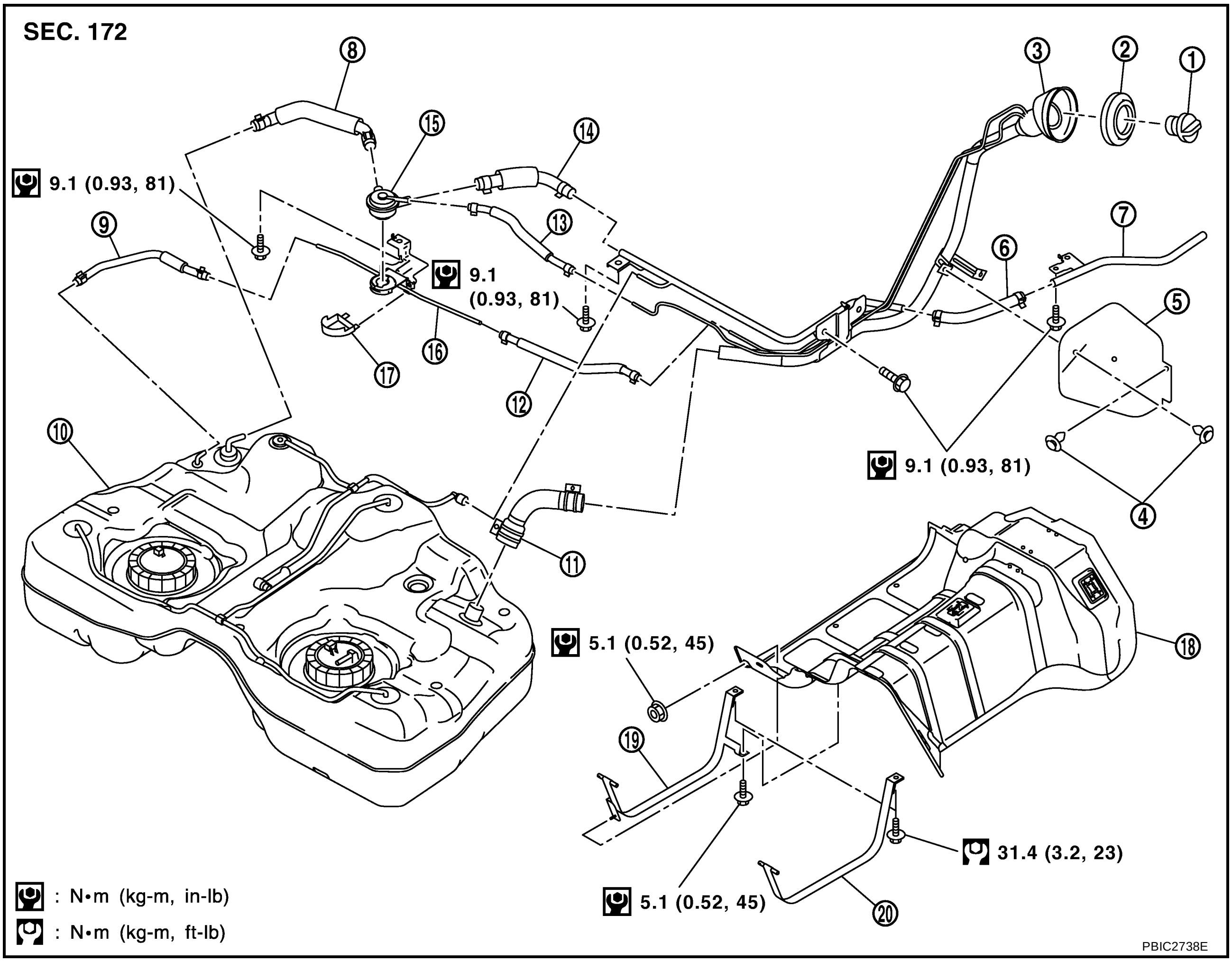

1.	Fuel filler cap	2.	Grommet	3.	Fuel filler tube
4.	Clip	5.	Fuel filler tube protector	6.	Vent hose
7.	Vent tube	8.	Vent hose	9.	Recirculation hose
10.	Fuel tank	11.	Fuel filler hose	12.	Recirculation hose
13.	Signal hose	14.	Vent hose	15.	Refueling EVAP vapor cut valve
16.	Refueling EVAP vapor cut valve bracket	17.	Cover	18.	Fuel tank protector
19.	Fuel tank band	20.	Fuel tank band		

REMOVAL

WARNING:

Be sure to read “General Precautions” when working on the fuel system. Refer to FL-3, "General Precautions" .

1. Perform the steps 1 to 7 of “REMOVAL” in “ FUEL LEVEL SENSOR UNIT, FUEL FILTER AND FUEL PUMP ASSEMBLY”. Refer to FL-4, "REMOVAL" .

- Drain fuel from fuel tank if necessary. Refer to FL-4, "REMOVAL" .

  CAUTION:

  Because fuel tank forwardly inclines and is not firmly affixed when installing/removing, fuel should be drained if there is any remaining quantity.

- Perform work on level place.

2. Remove exhaust center tube and insulator. Refer to EX-2, "EXHAUST SYSTEM" .
3. Remove propeller shaft. (AWD models) Refer to PR-3, "REAR PROPELLER SHAFT" .

4. Using a transmission jack, support the bottom of final drive assembly (AWD models) or rear suspension member (2WD models).
5. Remove mounting nuts on rear suspension member, and lower the transmission jack carefully until just before rear suspension member is removed from stud bolts on the vehicle. Refer to RSU-5, "REAR SUSPENSION ASSEMBLY" .

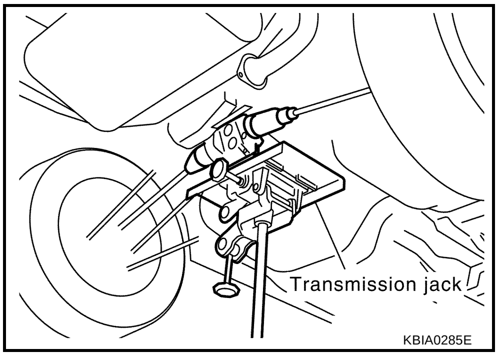

6. Remove fuel tank protector.
7. Disconnect fuel filler hose, EVAP hose, recirculation hose and vent hose at fuel tank side.
   - For disconnection procedure of quick connector on EVAP hose, refer to FL-4, "FUEL LEVEL SENSOR UNIT, FUEL FILTER AND FUEL PUMP ASSEMBLY" .

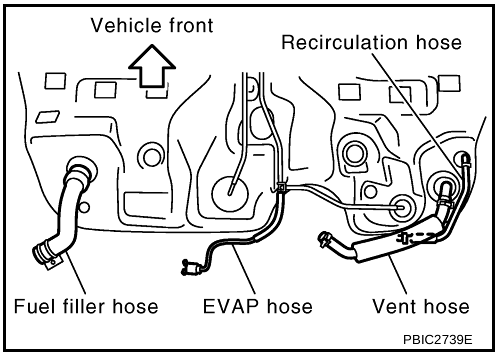

8. Remove fuel tank band mounting bolts while supporting fuel tank.

   CAUTION:
   Sustain the bottom of fuel tank by using plate or anything same.
9. Remove fuel tank.
   - After lifting down the front portion of fuel tank, remove fuel tank by pulling it from the upper front of final drive assembly, so that fuel tank can move forwardly. (AWD models)

   CAUTION:
   Pay attention not to drop fuel tank because it forwardly inclines and is not firmly affixed.

   NOTE:
   It is desirable that more than two technicians work together.

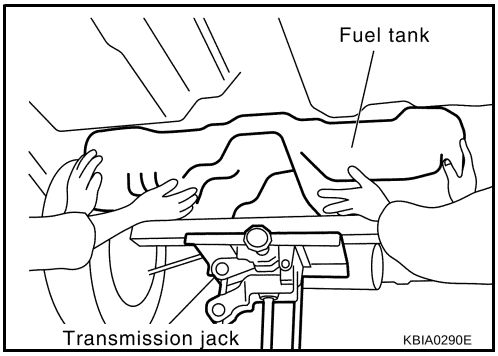

10. Remove fuel filler tube with the following procedure if necessary.

a. Remove fuel filler tube protector.

b. Remove bolts and nuts between strut and rear axle assembly. Refer to RSU-7, "Component" .

c. Remove fuel filler tube.

INSTALLATION

Note the following, and install in the reverse order of removal.

- Surely clamp fuel hoses and insert hose to the length below.

Fuel filler hose	**: 35mm (1.38 in)**
The other hoses	**: 25mm (0.98 in)**

- Be sure hose clamp is not placed on swelled area of fuel tube.
- Tighten fuel hose clamp so that the remaining length of screw thread becomes to the following.

Fuel tank side	**: 2 - 6 mm (0.08 - 0.24 in)**
Fuel filler tube side	**: 7 - 11 mm (0.28 - 0.43 in)**

- Fit fuel tank band pin to the vehicle side securely.

- Before fixing fuel tank, temporarily install fuel filler tube if removed.

  CAUTION:

  Use genuine fuel filler tube mounting bolts or equivalent. Make sure to tighten them to the specified torque.
- To connect quick connector, refer to FL-8, "Quick Connector" .

INSPECTION AFTER INSTALLATION

Use the following procedure to check for fuel leaks.

1. Turn ignition switch “ON” (with engine stopped), and check connections for leaks by applying fuel pressure to fuel piping.
2. Start engine and rev it up and make sure there are no fuel leaks at the fuel system tube and hose connections.

SERVICE DATA AND SPECIFICATIONS (SDS)

PFP:00030

Standard and Limit

ABS00D0Q

FUEL TANK

Fuel tank capacity	Approx. 60 ℓ (15-7/8 US gal, 13-1/4 Imp gal)
Fuel recommendation	Refer to GI-5